| REVISIONS | | | |
|---|---|---|---|
| REV. | DESCRIPTION | DATE | APPROVED |

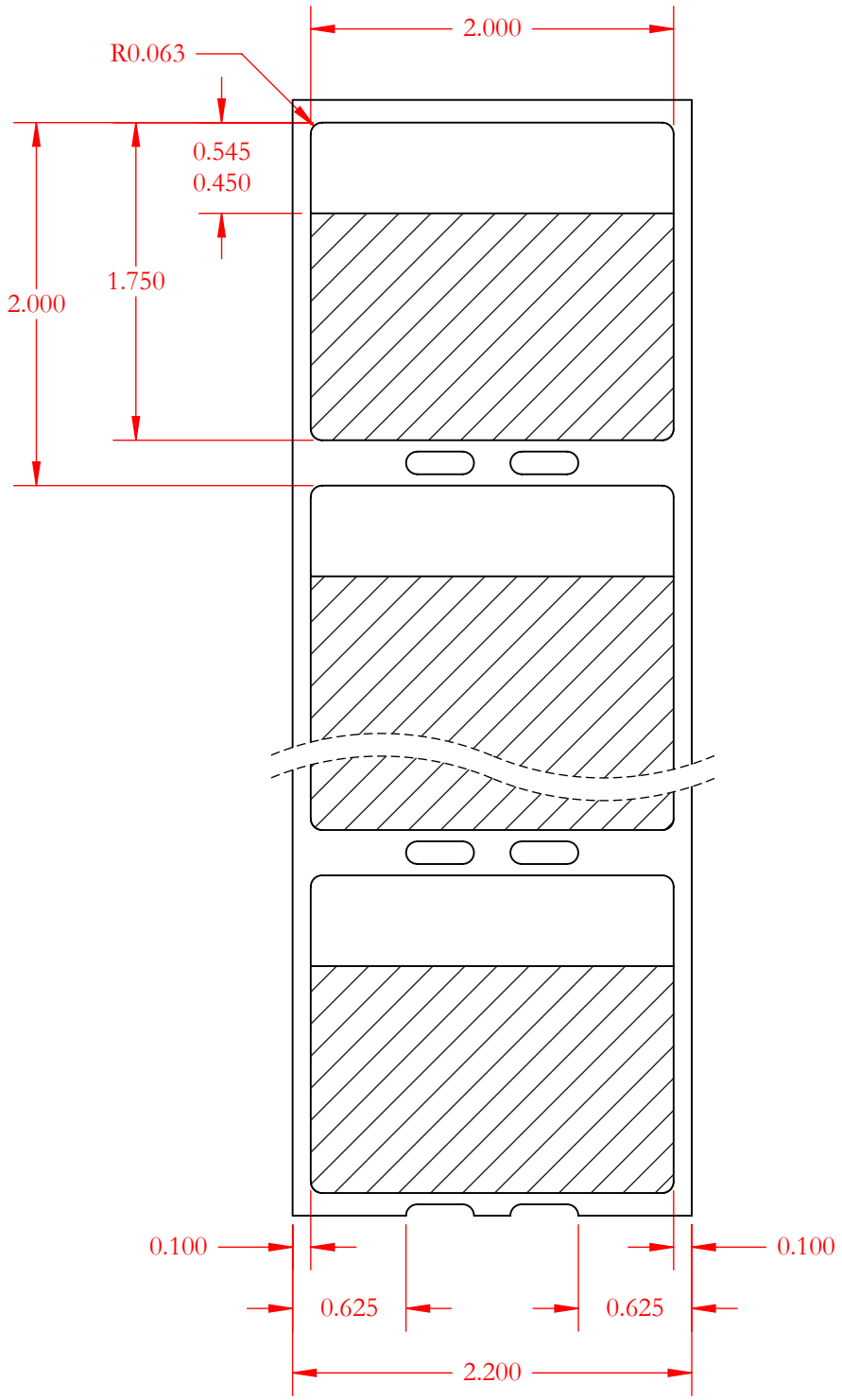


ZIPTAPE LABEL I.D. SYSTEMS
2122 W. 5th Pl., Tempe, Az 85281 (480) 967-8888

DIMENSIONS ARE IN INCHES
TOLERANCES:
FRACTIONAL ±1/32
TWO PLACE DECIMAL ±0.01
THREE PLACE DECIMAL ±0.005
ANGLES: ±1°

# THS-236

| | | | | | | | | |
|---|---|---|---|---|---|---|---|---|
| Description: | THS-236 | | | Width: | 2.00 | Margins: | 0.10 | **PROPRIETARY AND CONFIDENTIAL** |
| Customer: | - | | | Height: | 1.75 | Web Width: | 2.20 | THIS DESIGN IS THE PROPERTYOF ACCESSIBLE PRODUCTS CO. AND SHALL NOT BE USED OR REPRODUCED WITHOUT WRITTEN CONSENT. |
| Material: | 727 | Liner: | 50 lb. | Write on Height: | 0.50 | Ft per 1000 Lables: | 166.67 | |
| Date: | 9/12/2011 | Drawn By: | R. Henry | Horizontal Repeat: | 2.00 | Ribbon Length per 1000 | 166.67 | |
| Dwg. Number: | THS-236 | | | Vertical Repeat: | 2.00 | Scale: | 1:1 | |
| No. Ac (run): | 1 | No. AC (die): | 1 | No. AR: | 4 | No. Teeth: | 64 | |